Smart Node
Discover the Joy of Smart Living

smartnode.in

DALI MANUAL

Gateway (Flush mount)
Wi-Fi

Smart Node
Discover the Joy of Smart Living

Wi-Fi

DALI
GATEWAY
FLUSH MOUNT

WHAT IS IN THE DALI BOX?

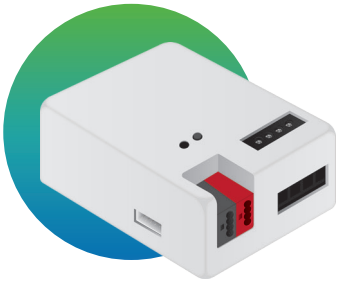

DALI Flush Mount

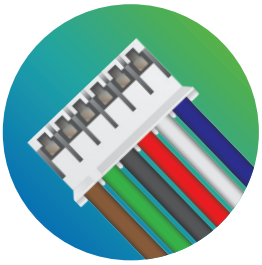

Touch cable

Touch Panel

WIRING DIAGRAM

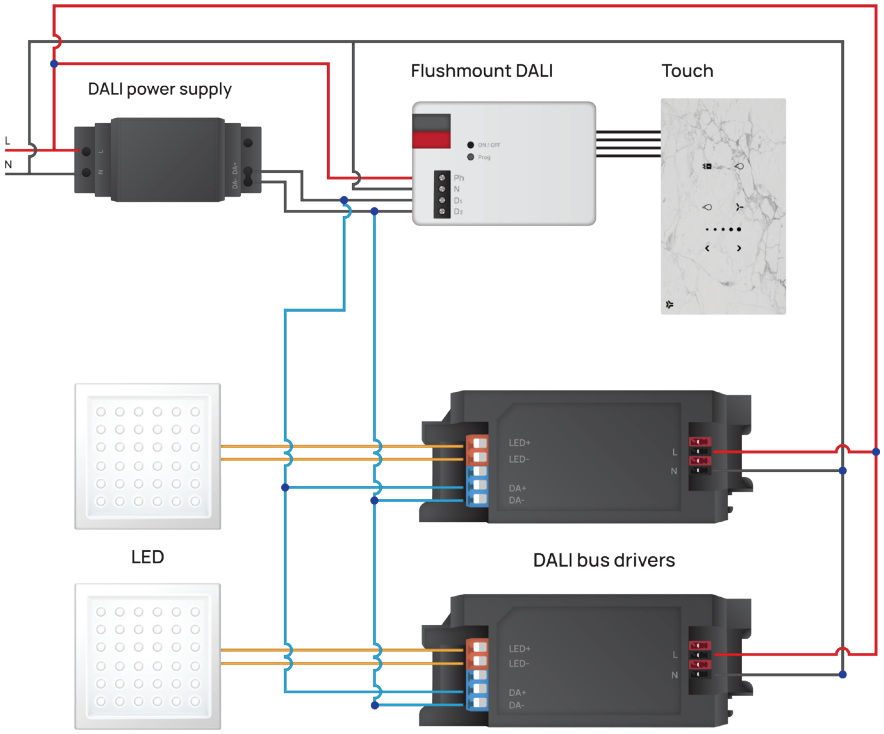

TECHNICAL INFORMATION

Mains Supply	Voltage Power - 85-300 VAC @50-60Hz Max.
Power consumption	max. 3W
Current consumption	100mA @ 85V AC
DALI Supply	16V DC typical Max. 90mA
Type of connection	DALI bus terminal
Ambient Temperature Range	- 5°C +45°C
Storage Temperature	- 25°C...+ 55°C
Transport Temperature	-25°C.... +70°C
Humidity	95% no moisture condensation
Color	White
Mounting type	Flush mount
Wireless type	Wi-Fi 2.4 GHz 802.11 b/g/n
App store	Android / iOS
Warranty	5 years

TUTORIALS

- To start configuration mode with Smart Node application
- How to setup DALI Commissioning
- How to setup group to DALI module
- How to setup scenes to DALI module
- How to add DALI switches/groups/ into Room
- How to add DALI scene
- How to add switch, groups and scene on the touch in DALI flush mount
- To add a flush mount DALI switches to Smart Node mobile application

Smart Node Automation Pvt. Ltd.

A-09-02-B, Kamdhenu Industrial Estate
Opp, Gorwa Water Tank, Gorwa, Vadodara-390016

Tel.: +91 8200824126 | Email : info@smartnode.in
www.smartnode.in